FULLSTAR

PRS0603S,0704S SERIES

HIGH CURRENT SURFACE–MOUNT POWER SHIELDED INDUCTORS

FEATURES:

- Current up to 2.6A
- Very Small Foot Pint
- Flat–top for Pick& Place
- Shielded structure

APPLICATION:

- Power supply for VTRs .
- OA equipment.
- LCD televisions.
- Notebook PCs.
- Portable communication equipment.
- DC/DC converters,etc.



ELECTRICAL CHARACTERISTICS:

Part Number	L μ H	Test Freq KHz	DCR Ω Max	IDC Max A
PRS0603S–100M	10	10	0.14	1.00
PRS0603S–120M	12	10	0.16	0.94
PRS0603S–150M	15	10	0.18	0.86
PRS0603S–180M	18	10	0.25	0.78
PRS0603S–220M	22	10	0.32	0.76
PRS0603S–270M	27	10	0.36	0.64
PRS0603S–330M	33	10	0.41	0.61
PRS0603S–390M	39	10	0.47	0.53
PRS0603S–470M	47	10	0.51	0.50
PRS0603S–560M	56	10	0.72	0.46
PRS0603S–680M	68	10	0.82	0.42
PRS0603S–820M	82	10	0.82	0.42
PRS0603S–101M	100	10	0.82	0.42
PRS0603S–121M	120	10	0.82	0.42
PRS0603S–151M	150	10	0.82	0.42
PRS0603S–181M	180	10	0.82	0.42
PRS0603S–221M	220	10	0.82	0.42
PRS0603S–271M	270	10	0.82	0.42
PRS0603S–331M	330	10	0.82	0.42
PRS0603S–391M	390	10	0.82	0.42
PRS0603S–471M	470	10	0.82	0.42
PRS0603S–561M	560	10	0.82	0.42
PRS0603S–681M	680	10	0.82	0.42
PRS0603S–821M	820	10	0.82	0.42
PRS0704S–100M	10	10	0.07	1.65
PRS0704S–120M	12	10	0.07	1.57
PRS0704S–150M	15	10	0.08	1.39
PRS0704S–180M	18	10	0.10	1.9
PRS0704S–220M	22	10	0.13	1.12
PRS0704S–270M	27	10	0.16	1.06
PRS0704S–330M	33	10	0.18	0.97
PRS0704S–390M	39	10	0.18	0.91
PRS0704S–470M	47	10	0.27	0.80
PRS0704S–560M	56	10	0.29	0.76
PRS0704S–680M	68	10	0.33	0.68
PRS0704S–820M	82	10	0.43	0.62
PRS0704S–101M	100	10	0.49	0.55
PRS0704S–121M	120	10	0.68	0.49
PRS0704S–151M	150	10	0.94	0.44
PRS0704S–181M	180	10	1.00	0.40
PRS0704S–221M	220	10	1.18	0.36
PRS0704S–271M	270	10	1.30	0.33
PRS0704S–331M	330	10	1.30	0.33
PRS0704S–391M	390	10	1.30	0.33
PRS0704S–471M	470	10	1.30	0.33
PRS0704S–561M	560	10	1.30	0.33
PRS0704S–681M	680	10	1.30	0.33
PRS0704S–821M	820	10	1.30	0.33

Note:1. K= ± 10%,M= ± 20%,N= ± 30%

CHARACTERISTICS:

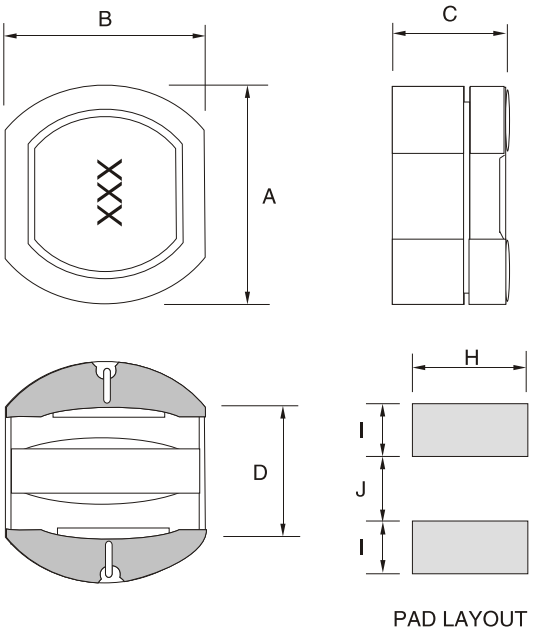

PAD LAYOUT

DIMENSIONS IN: mm

Part Number	A	B	C	D	H	I	J
PRS0603S	6.2 ± 0.3	5.6 ± 0.3	3.2 ± 0.3	1.7	5.5	2.25	1.7
PRS0704S	7.8 ± 0.35	7.0 ± 0.35	4.5 ± 0.4	1.9	7.5	4.0	2.0

TECHNICAL INFORMATION:

- Testing: (Equivalent acceptable)
  Inductance:HP4285A
  RDC:QuadTech 1880 Milliohmmeter
  –Q– HP4342A – SRF–HP4191A
- IDC Max:Determined when superimposed
  DC current is decreased 10% against its initial value
- Operating temperature: –40℃ to +85℃
- Storage Temperature: –40℃ to +105℃
- Solder methods: Vapor Phase,Infrared Reflow
- Resistance to soldering heat:260℃ for 10 seconds
- Solvent resistance: Conforms to MIL–STD–202E
- Marking: Inductance & Tolerance
  Ordering information:
- Type:Surface Mounting Type.
- Style:DR Core with RL core.
- Anductance:101 for 100uH.
- Anductance tolerance:M: ± 20%.

Notel:All specification subject to change without noticed.

FULLSTAR

PRS1005S,1205S SERIES

HIGH CURRENT SURFACE–MOUNT POWER SHIELDED INDUCTORS

FEATURES:

- Current up to 2.6A
- Very Small Foot Pint
- Flat–top for Pick& Place
- Shielded structure

APPLICATION:

- Power supply for VTRs .
- OA equipment.
- LCD televisions.
- Notebook PCs.
- Portable communication equipment.
- DC/DC converters,etc.



ELECTRICAL CHARACTERISTICS:

Part Number	L μ H	Test Freq KHz	DCR Ω Max	IDC Max A
PRS1005S–100M	10	10	0.06	0.05
PRS1005S–120M	12	10	0.07	0.05
PRS1005S–150M	15	10	0.07	0.06
PRS1005S–180M	18	10	0.08	0.06
PRS1005S–220M	22	10	0.08	0.07
PRS1005S–270M	27	10	0.10	0.08
PRS1005S–330M	33	10	0.11	0.10
PRS1005S–390M	39	10	0.12	0.11
PRS1005S–470M	47	10	0.14	0.12
PRS1005S–560M	56	10	0.19	0.15
PRS1005S–680M	68	10	0.21	0.17
PRS1005S–820M	82	10	0.28	0.20
PRS1005S–101M	100	10	0.34	0.25
PRS1005S–121M	120	10	0.37	0.28
PRS1005S–151M	150	10	0.51	0.40
PRS1005S–181M	180	10	0.57	0.48
PRS1005S–221M	220	10	0.78	0.52
PRS1005S–271M	270	10	0.87	0.70
PRS1005S–331M	330	10	1.20	0.80
PRS1005S–391M	390	10	1.34	1.08
PRS1005S–471M	470	10	1.50	1.20
PRS1005S–561M	560	10	1.50	1.34
PRS1005S–681M	680	10	1.50	1.78
PRS1005S–821M	820	10	1.50	2.00
PRS1205S–100M	10	10	2.06	2.65
PRS1205S–120M	12	10	1.94	2.50
PRS1205S–150M	15	10	1.72	2.45
PRS1205S–180M	18	10	1.58	2.40
PRS1205S–220M	22	10	1.42	2.20
PRS1205S–270M	27	10	1.32	2.00
PRS1205S–330M	33	10	1.16	1.80
PRS1205S–390M	39	10	1.10	1.65
PRS1205S–470M	47	10	1.00	1.50
PRS1205S–560M	56	10	0.93	1.38
PRS1205S–680M	68	10	0.85	1.26
PRS1205S–820M	82	10	0.79	1.14
PRS1205S–101M	100	10	0.72	1.05
PRS1205S–121M	120	10	0.63	0.95
PRS1205S–151M	150	10	0.55	0.85
PRS1205S–181M	180	10	0.50	0.77
PRS1205S–221M	220	10	0.47	0.70
PRS1205S–271M	270	10	0.41	0.63
PRS1205S–331M	330	10	0.37	0.57
PRS1205S–391M	390	10	0.5	0.52
PRS1205S–471M	470	10	0.33	0.48
PRS1205S–561M	560	10	0.33	0.44
PRS1205S–681M	680	10	0.33	0.40
PRS1205S–821M	820	10	0.33	0.36

Note:1. K= ± 10%,M= ± 20%,N= ± 30%

CHARACTERISTICS:

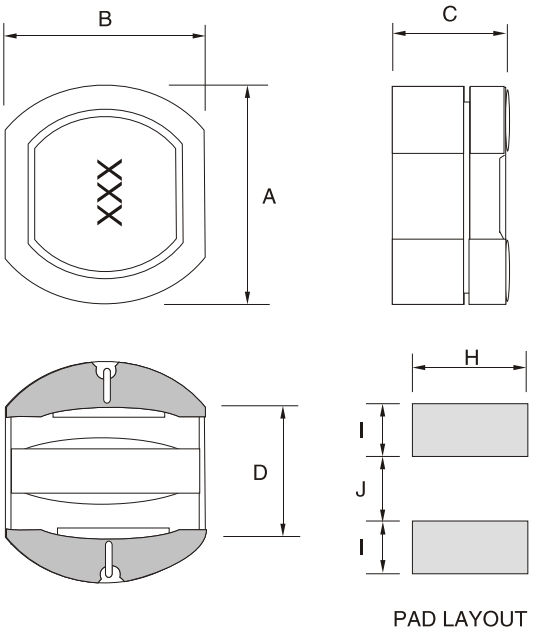

PAD LAYOUT

DIMENSIONS IN: mm

Part Number	A	B	C	D	H	I	J
PRS1005S	10.0 ± 0.4	9.0 ± 0.4	5.0 ± 0.5	2.5	9.5	5.0	2.5
PRS1205S	12.6 ± 0.5	11.6 ± 0.5	5.4 ± 0.5	3.0	12.0	6.0	3.0

TECHNICAL INFORMATION:

- Testing: (Equivalent acceptable)
  Inductance:HP4285A
  RDC:QuadTech 1880 Milliohmmeter
  –Q– HP4342A – SRF–HP4191A
- IDC Max:Determined when superimposed
  DC current is decreased 10% against its initial value
- Operating temperature: –40℃ to +85℃
- Storage Temperature: –40℃ to +105℃
- Solder methods: Vapor Phase,Infrared Reflow
- Resistance to soldering heat:260℃ for 10 seconds
- Solvent resistance: Conforms to MIL–STD–202E
- Marking: Inductance & Tolerance
  Ordering information:
- Type:Surface Mounting Type.
- Style:DR Core with RL core.
- Anductance:101 for 100uH.
- Anductance tolerance:M: ± 20%.

Notel:All specification subject to change without noticed.